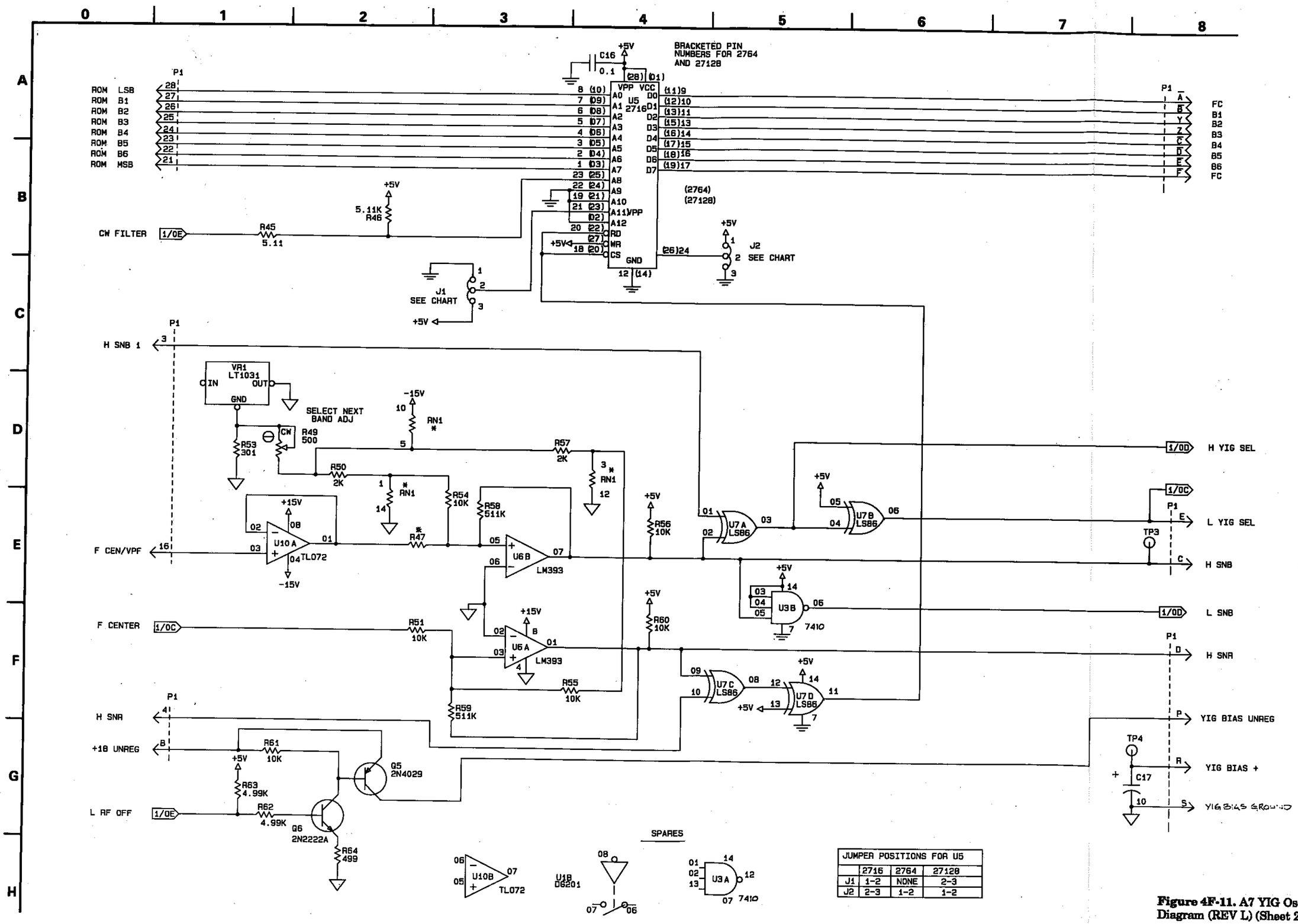

JUMPER POSITIONS FOR U5			
	2716	2764	27128
J1	1-2	NONE	2-3
J2	2-3	1-2	1-2

Figure 4F-11. A7 YIG Oscillator PCB Schematic Diagram (REV L) (Sheet 2 of 2)